SARGENT
REG. U.S. PAT. OFF.

Combination Planes
Nos. 1080 and 1085

Description
and
Directions for Using

SARGENT & COMPANY
Manufacturers
NEW HAVEN, CONN., U. S. A.

PRINTED IN THE U.S.A. 6.43

SARGENT
REG. U.S. PAT. OFF.

Combination Planes Nos. 1080 and 1085

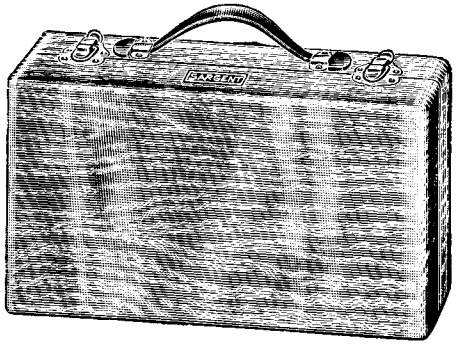

Wooden box in which Planes Nos. 1080 and 1085 are packed, showing it closed and in use as a carrying case

COMBINATION PLANE NO. 1080

Complete with 22 cutters and wooden box.....Each $17.50
Weight (Plane only).....6 lbs. 4 oz.
Weight, packed, including wooden box and fibre shipping case...8 lbs. 12 oz.
Illustrations and description.....Pages 4 and 5
Regular Cutters.....Pages 10 and 11
Special Cutters.....Pages 12
Separate Parts.....Pages 17

COMBINATION PLANE NO. 1080PB

Same as No. 1080 except packed in a cardboard container.....Each $17.00

COMBINATION MOULDING PLANE NO. 1085

Complete with 52 cutters and wooden box.....Each $34.00
Weight (Plane only).....11 lbs. 4 oz.
Weight, packed, including wooden box and fibre shipping case..14 lbs. 12 oz.
Illustrations and description.....Pages 6 to 9
Cutters.....Pages 10 to 15
Separate Parts.....Pages 18 and 19

SPECIAL NOTICE

The following points should be kept in mind by the user of Planes Nos. 1080, 1080PB and 1085.

Pressure should be put only on the Handle of the Bed, the Fences act merely as guides and should be held lightly.

The cutters are slightly beveled on the side to allow clearance.

In using No. 1085 the Fences ordinarily should be exactly at right angles to the edge of the work to prevent binding.

SARGENT Planes No. 1080

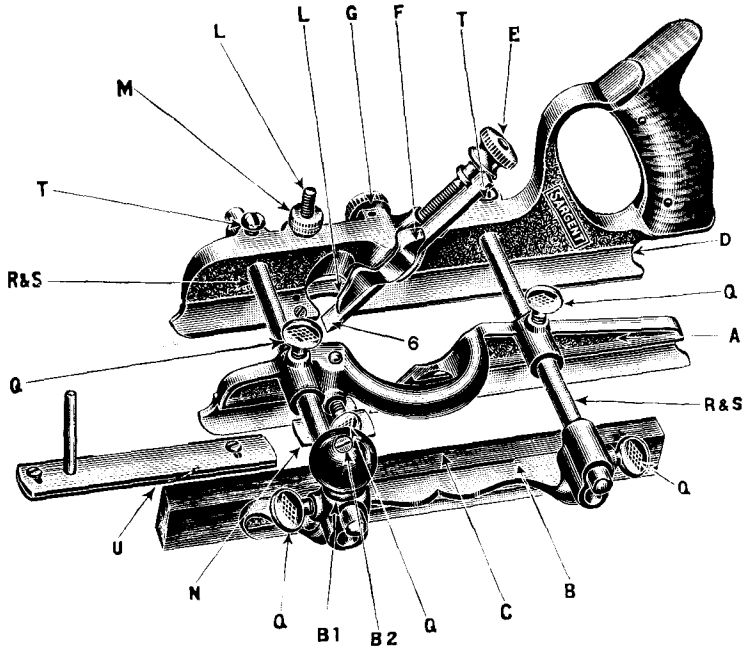

For a complete list of the parts indicated by the letters, see page 17

1. **Combination Plane No. 1080** is designed for use in the following types of work: Dadoing, Rabbeting, Tonguing and Grooving, Beading, Matching and Sash Cutting. It may also be used as a Filletster and with special cutters as a Reeding Plane.

2. The Plane has a Fence (**B**) which is reversible for use on wide boards, and which is also adjustable along the Rods for either side of the Plane. It is designed for convenient service when the Plane is used as a Filletster or Plow.

3. The Plane also has a Movable Bed (**A**) to be used as an additional support with cutters except the ⅜ inch and narrower.

4. Both the Bed (**D**) and the Movable Bed (**A**) have Spur Cutters (**H**), shown in the illustration on Page 6, designed to cut the wood ahead of the cutter (usually across the grain) at right angle to it, and thus insure smooth results.

5. Two sets of Rods are furnished on which the Fence and Movable Bed slide. One set (**S**) is 4½ inches, the other (**R**), 8¼ inches in length (see Page 17).

6. The Plane is fitted with two Depth Gauges for regulating the depth of the cut, one (**N**) on the Movable Bed, and one (**L**) on the Bed. (**L** may be raised or lowered by means of an adjusting nut **M**.)

(Continued)

7. An Adjustable Guide (**U**) is provided for use when beading or grooving on the edge of a tongued board, where there is not room for the Fence. In that case it replaces the Depth Gauge (**N**).

8. The Handle has ample room for the hand. The metal parts of the Plane except the cutters are Cadmium Plated. The wood used on the Fence and Handle is Mahogany.

9. The cutter is raised or lowered by means of a positive Up and Down Adjustment (**E**) so constructed that the cutter will not easily become detached from it.

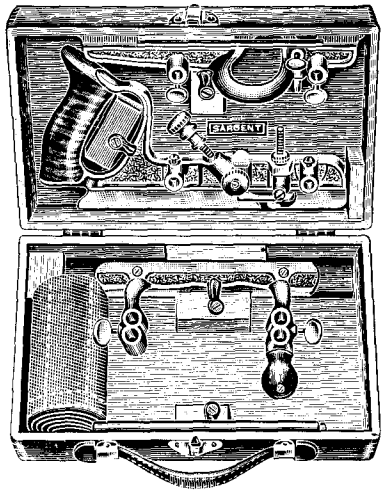

Plane No. 1080, showing the wooden box open and the Plane in place

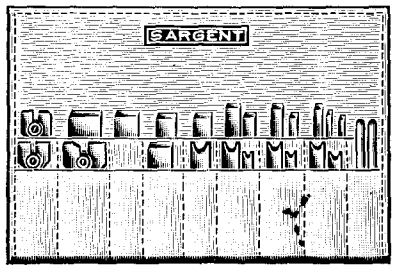

Cutters for No. 1080 in canvas case

Compactly Packed

The Plane is packed in a handled box of stained hard wood, which may be used conveniently by a carpenter as a case for the tool. The fixtures are so arranged that the parts of the Plane are held firmly in position in the box, but may be removed easily as required.

Protection for the Cutters

No. 1080 is packed regularly with 22 different cutters, Nos. 1 to 18 inclusive and Nos. 21, 23 and 24 (see pages 10 and 11). These are packed in a canvas case arranged with a series of pockets so that each cutter may be taken out and replaced without confusion. The flap is folded over the cutters to protect them before the case is rolled up. In addition there are 7 cutters, Nos. 26 to 32 inclusive (see page 12), that may be used on the Plane, but which are not packed with it regularly.

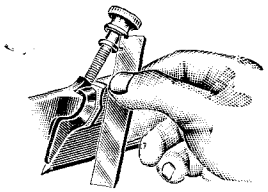

How to insert the Cutters

In putting the cutter in position, first (holding it at an angle) insert the prong at the top in the depression under the Adjusting Nut (**E**) so that the Nut enters the slot then push the cutter into position. (See illustration.)

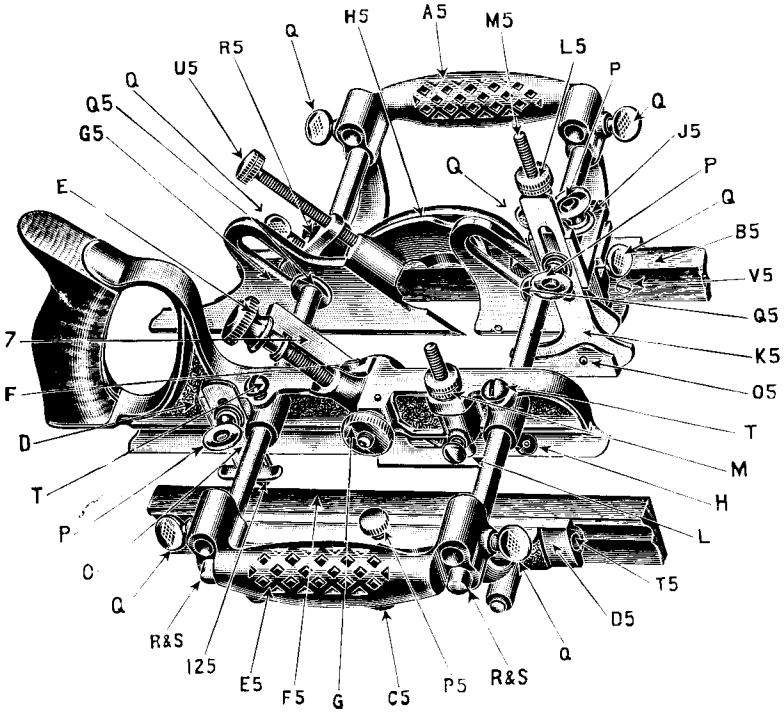

For a complete list of the parts indicated by the letters, see pages 18 and 19

1. **Plane No. 1085** is a Combination Moulding Plane that will do all the work for which No. 1080 is suitable: Dadoing, Rabbeting, Tonguing and Grooving, Beading, and Sash Cutting. It may also be used as a Filletster and as a Reeding Plane and is also adapted for slitting, Matching, making Hollows and Rounds and a variety of mouldings, including Ogee (Reverse, Roman and Grecian) and Quarter Round with Bead.

2. 52 cutters are furnished regularly with No. 1085 including the 29 cutters (22 regular and 7 special shown on pages 10 to 12) used with the No. 1080 and the 23 additional cutters intended especially for No. 1085 (shown on pages 13 to 15). These Cutters are Nos. 1 to 18 inclusive, Nos. 21, 23, 24 and 125, and Nos. 101 to 122 inclusive. Notice that the cutters numbered in the No. 100 series (101, etc.) can only be used on Plane No. 1085.

3. Special cutters can be furnished to order suitable for any type of work at a reasonable price. A drawing with full description and measurements of cutter is required where a special cutter is ordered. Blanks for cutters will also be furnished to order.

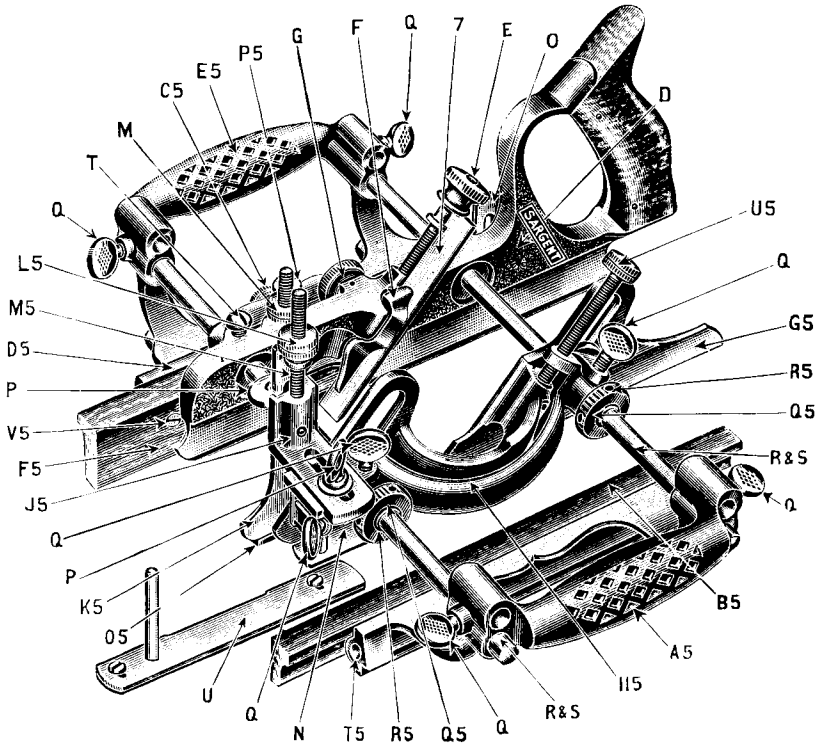

For a complete list of the parts indicated by the letters, see pages 18 and 19

4. **Plane No. 1085** is provided with two Fences (**B5** and **F5**), both of which are adjustable along the Rods on either side. Fence **A5** is reversible for use on wide boards. In Fence **A5** the lower holes for the Rods should be used where a firm support is required and in cases where the room is limited. Use upper holes where it is necessary for the Fence to project underneath the cutter as in Filletster work.

5. The other Fence (**E5**) is provided with a regulating feature for especially fine work. By means of the Fence Adjusting Screw (**C5**), the wood bearing surface of the Fence, namely, the Plate (**F5**), may be moved forward or back without disturbing the position of the main part of the Fence. The Set Screw (**P5**) locks the Plate to the Fence.

6. Both Fences are designed for convenient use when the Plane is required as a Filletster or in Plow work, and in Chamfering or other beveling. In beveling, the Fence Plates (**B5** and **F5**) may be inclined to an angle of 45 degrees by means of two Set Screws (**V5**).

SARGENT Planes No. 1085

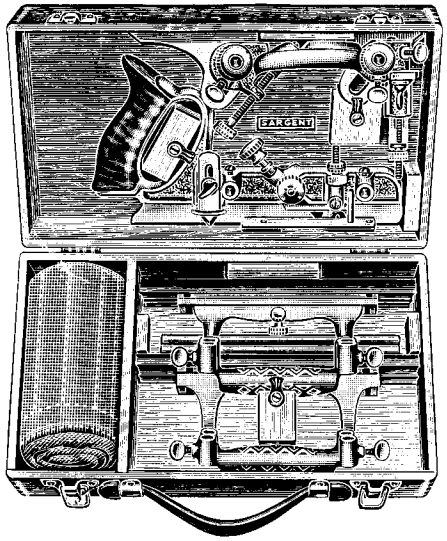

Plane No. 1085, showing the wooden box open and the Plane in place

Compactly Packed

The Plane is packed in a handled box of stained hard wood which may be used conveniently by a carpenter as a case for the tool. The fixtures are so arranged that the parts of the Plane are held firmly in position in the box, but may be removed readily as required.

1. **No. 1085** also has a Movable Bed (**G5**) to be used as an additional support except on cutters 3/8 inch and narrower. This may be raised or lowered to any position desired by means of the Adjusting Screw (**U5**). The Movable Bed is held in Position by two Coupling Nuts (**R5**).

2. Both the Bed (**D**) and the Movable Bed (**G5**) have Spur Cutters (**H**), shown in the illustration on Page 6, designed to cut the wood ahead of the cutter (usually across the grain) at right angles to it, and thus insures smooth results.

3. Two sets of Rods are furnished on which the Fences and Movable Bed slide. One set (**S**) is 4½ inches, the other (**R**) 8¼ inches in length (see Pages 18 and 19).

4. The Plane is fitted with two Depth Gauges for regulating the depth of the cut, one (**N**) on the Movable Bed, and one (**L**) on the Bed. (**L** may be raised or lowered by means of an Adjustable Nut **M**).

5. A Stop (**O**) is provided to be used in connection with the Slitting Cutter **No. 125** (see Page 15), where it is desired to regulate the depth of the slitting cut.

6. An Adjustable Guide (**U**) is provided for use when beading or grooving on the edge of a tongued board, where there is not room for the Fence. In that case it replaces the Depth Gauge (**N**) shown in illustration on Page 7.

7. An Adjustable Stop (**K5**) is used in regulating the thickness of the shaving. This may be raised or lowered by means of the Adjustable Stop Nut (**L5**). It may be lowered laterally on Adjustable Stop Rest (**J5**). Where certain cutters are used, for example, Hollows and Rounds, on which the depth cannot be controlled from the edge of the cutter, this stop prevents the tendency for the cutters to tear the wood. By removing the Shoe (**O5**) the Adjustable Stop may be used as a guide in beads or grooves.

8. The Handle has ample room for the hand. The metal parts of the Plane except the cutters are Cadmium Plated. The wood used on the Fences and Handle is Mahogany.

9. The Cutters are raised or lowered by means of a positive Up and Down Adjustment (**E**) so constructed that the cutters will not easily become detached from it.

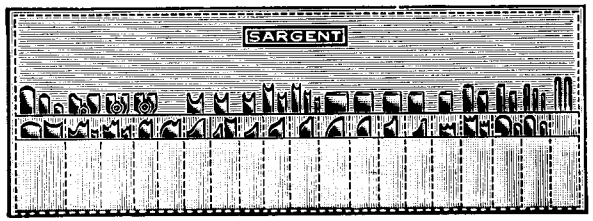

Cutters and Rods for No. 1085 in canvas case

Protection for the Cutters

The Cutters and extra rods are packed in a canvas roll in separate pockets, making them easy to select when required, and to replace.

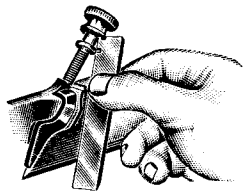

How to insert the Cutters

In putting the cutter in position, first (holding it at an angle) insert the prong at the top in the depression under the Adjusting Nut so that the Nut enters the slot, then push the cutter into position.

Cutters for Planes Nos. 1080 and 1085

Dado, Filletster and Tonguing

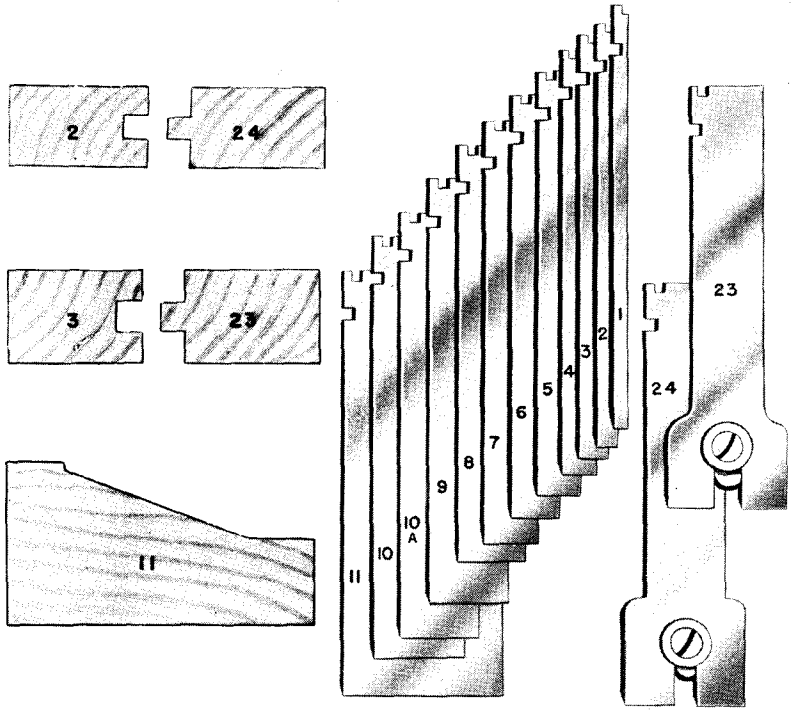

Above are illustrations of **Dado Cutters Nos. 1 to 10A; Filletster Cutter No. 11 and Tonguing Cutters Nos. 23 and 24.** The cross sections numbered 2, 24, etc., in the illustration show the exact cuts in the wood made by cutters Nos. 2, 24, etc. The height of the tongue made by Cutters 23 and 24 is regulated by the screw adjustments shown on these cutters. These are known as Tonguing Cutter Stops (**I and J**) and are illustrated on Pages 17 and 18.

For further description and prices of Cutters Nos. 1 to 11, 23 and 24, see Page 20.

Cutters for Planes Nos. 1080 and 1085

Beading Cutters

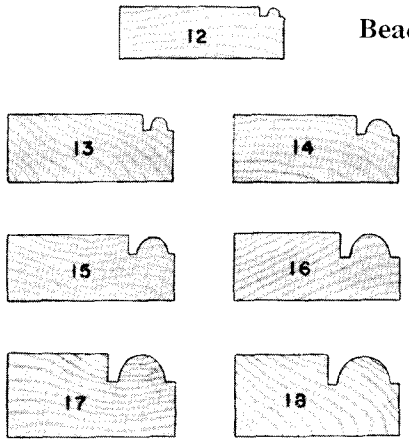

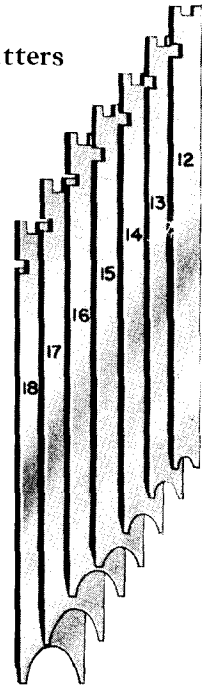

Above are illustrations of **Beading Cutters Nos. 12 to 18** and cross sections showing the exact cut in the wood made by each Cutter.

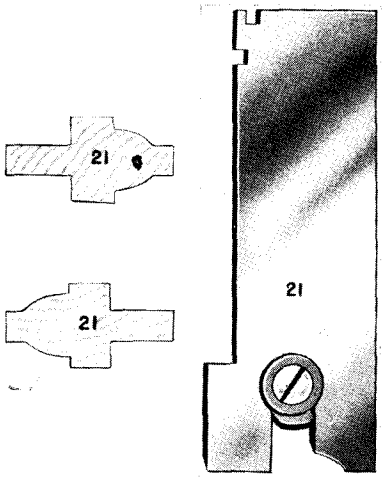

Sash Cutter

Illustration (at left) of **Sash Cutter No. 21** and cross sections showing the exact cut in the wood made by the Cutter. The two equal square end projections on the cross sections may be made greater or less by changing the Sash Cutter Stop (**K**) which is controlled by the screw shown on Cutter No. 21. For separate illustration of the Sash Cutter Stop (**K**) see Pages 17 and 18.

For further description and prices of Cutters Nos. 12 to 18 and 21, see Page 20.

SARGENT

Cutters for Plane No. 1085

Can be furnished to order for Planes No. 1080

Reverse Beading and Reeding

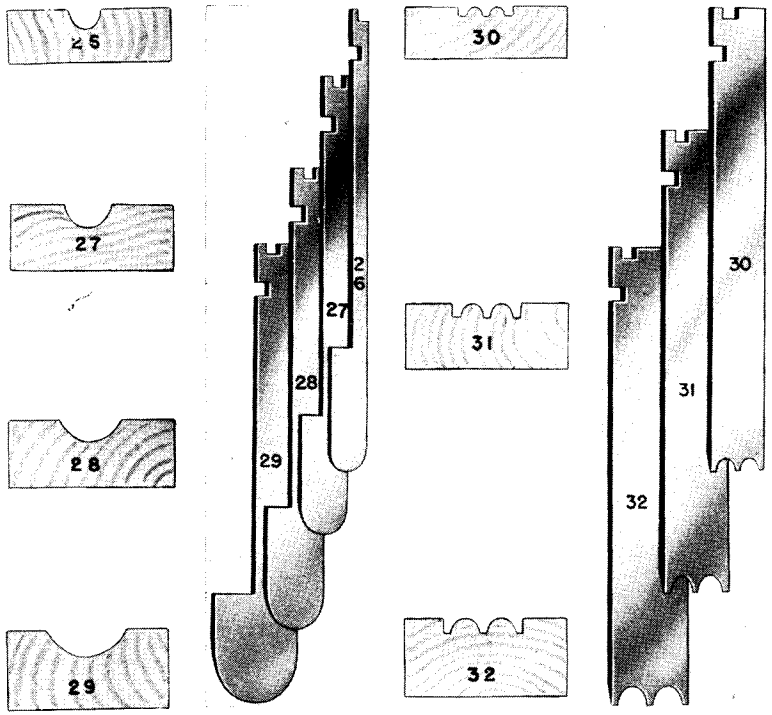

Above are illustrations of **Reverse Beading Cutters Nos. 26 to 29** and **Reeding Cutters (2 Beads) Nos. 30 to 32** and cross sections showing the exact cut in the wood made by each Cutter.

Note:—The Cutters in the above illustration are packed regularly with Plane No. 1085 but not with No. 1080. If desired for the latter they must be ordered special.

For further description and prices of Cutters Nos. 26 to 29 and 30 to 32, see Page 20.

SARGENT

Cutters for Plane No. 1085 only

Quarter Hollow and Quarter Round

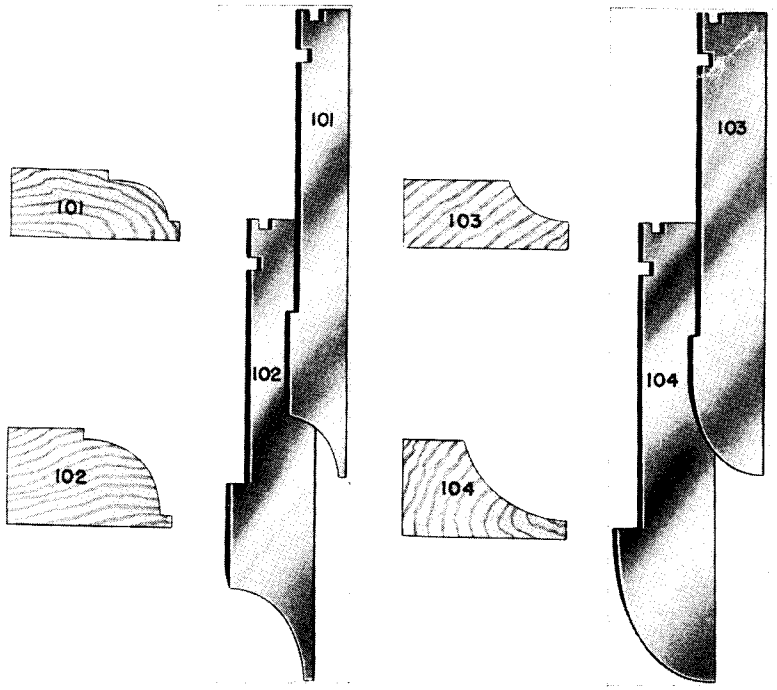

Above are illustrations of **Quarter Hollow Cutters Nos. 101 and 102** and **Quarter Round Cutters Nos. 103 and 104.** The cross sections, numbered to correspond with the Cutters, show the exact cut in the wood made by each Cutter.

For further description and prices of Cutters Nos. 101 to 104, see Page 20.

SARGENT

Cutters for Plane No. 1085 only

Reverse Ogee, Roman Ogee, Grecian Ogee and Quarter Round with Bead

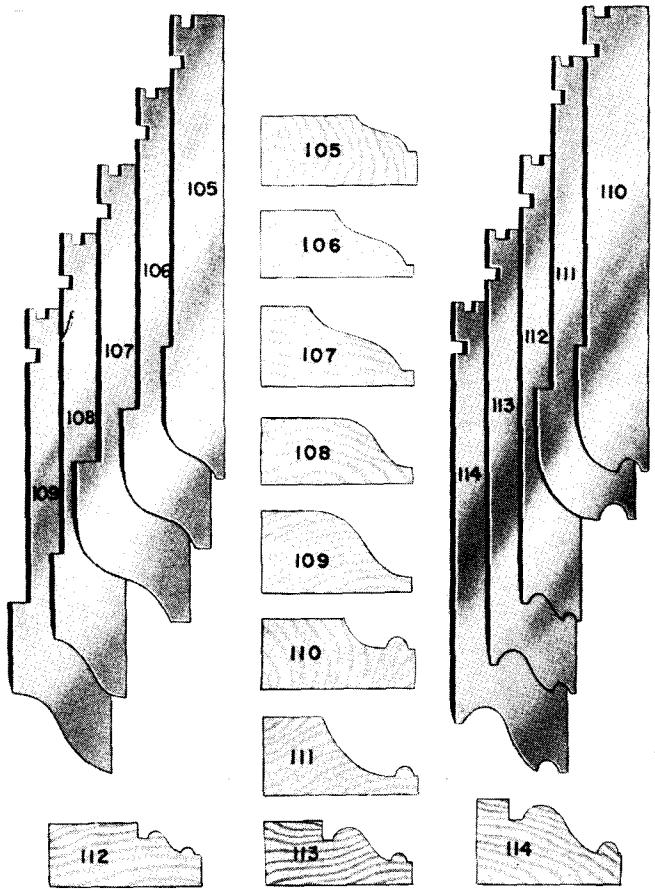

Above are illustrations of **Reverse Ogee Cutters Nos. 105 to 107, Roman Ogee Nos. 108, 109, Quarter Round with Bead Nos. 110 and 111, Grecian Ogee Nos. 112, 113 and 114.** The cross sections show the exact cut in the wood made by each Cutter.

For further description and prices of Cutters Nos. 105 to 114 inclusive, see Page 20.

SARGENT

Cutters for Plane No. 1085 only

Hollows and Rounds and Slitting Cutter

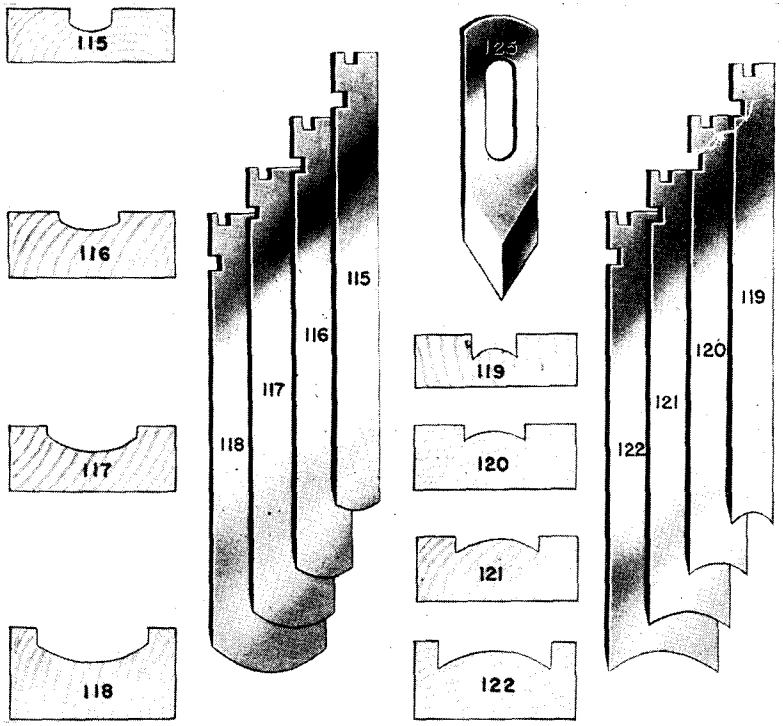

Above are illustrations of **Hollow Cutters Nos. 115 to 118** and **Rounds Nos. 119 to 122** and cross sections showing the exact cut in the wood made by each cutter.

Note:—Hollows make the wood round, Rounds make the wood hollow.

Slitting Cutter No. 125 is also shown. It is for use only with Plane No. 1085. This is used for cutting through boards, usually thin boards (with the grain), giving a more accurate and quicker result than a rip saw. For thick boards, cut partly through on one side and complete the cut on the other side of the board. (See Page 8, paragraph 5).

For further description and prices of Cutters Nos. 115 to 122 inclusive and No. 125, see Page 20.

SARGENT

Moulding and Cuts made by Plane No. 1085

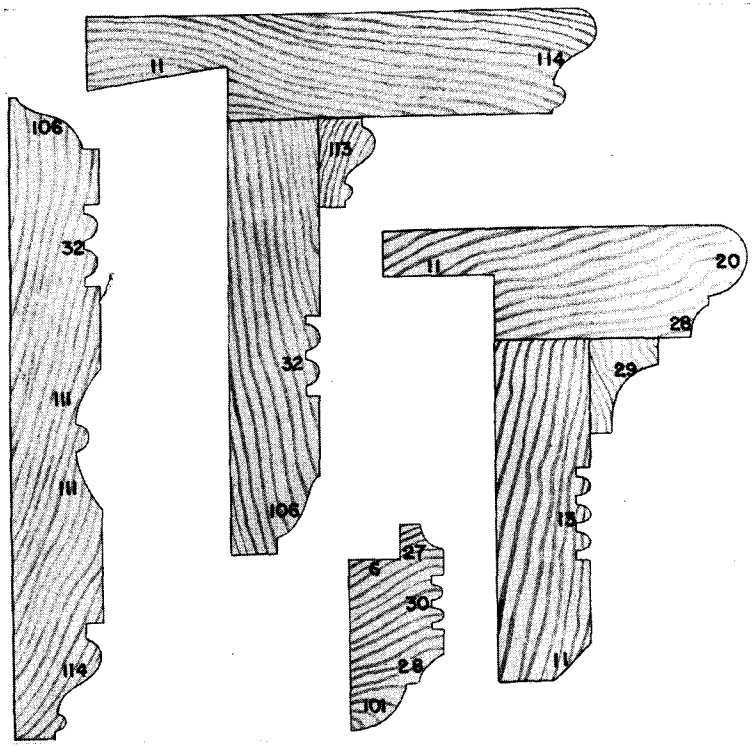

Above are illustrations of cross sections showing exact cuts in the wood made by using **Combination Moulding Plane No. 1085.** The numbers on the cross sections indicate the Cutters to be used to obtain the various cuts.

For further information see Pages 10 to 15 on which appear illustrations of each Cutter (refer to the numbers shown above) and also see Page 20 for descriptions and prices of Cutters.

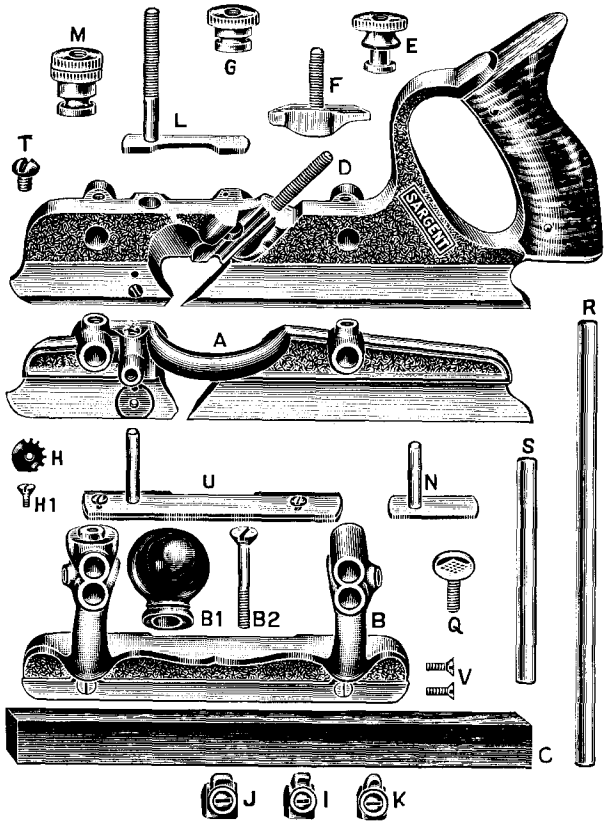

Parts for SARGENT Combination Plane No. 1080

Illustration on Page 4 shows complete Plane with parts in position.

Part	Description	Each
A	Movable Bed	$4.70
B	Fence	2.20
B1	Fence Knob	.38
B2	Fence Knob Screw	.27
C	Fence Plate	.55
D	Bed	7.60
E	Cutter Adjusting Nut	.90
F	Clamp	.55
G	Clamp Nut and Pin	.55
H	Spur Cutter and Screw	.22
H1	Screw for Spur Cutter	.10
I	Tonguing Cutter Stop, 3/16 inch, for Cutter 24	.33
J	Tonguing Cutter Stop, 1/4 inch, for Cutter 23	.33
K	Sash Cutter Stop for Cutter 21	.33
L	Depth Gauge with Adjustment	.55
M	Nut for Depth Gauge with Adjustment and Pin	.33
N	Depth Gauge	.45
Q	Thumb Screw for Parts A, B	.33
R	Long Rod, 8 1/4 inches	1.55
S	Short Rod, 4 1/2 inches	.77
T	Rod Set Screw	.22
U	Adjustable Guide (Complete with Screws)	.55
V	Two Machine Screws for Fence Plate C	.10

Parts for SARGENT Combination Plane

No. 1085

Parts listed and priced on Page 19. Illustrations on Pages 6 and 7 show the complete Plane with parts in position.

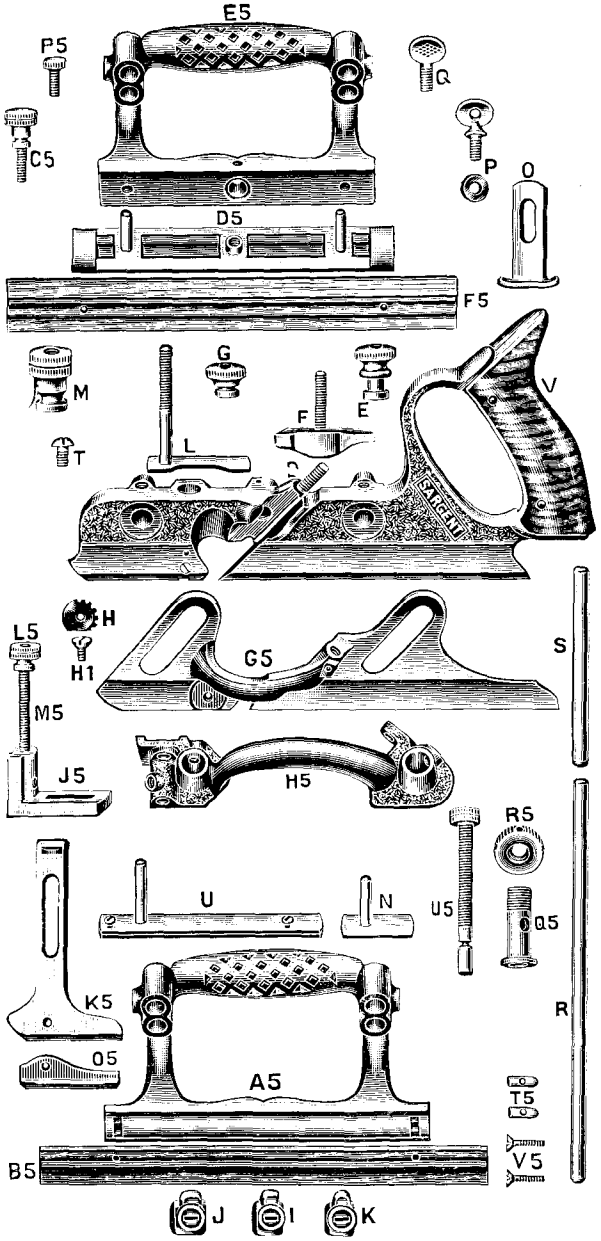

Parts for SARGENT Combination Plane

No. 1085

Parts illustrated on Page 18. Illustrations on Pages 6 and 7 show the complete Plane with Parts in position.

Part	Description	Each
D	Bed	$7.60
E	Cutter Adjusting Nut	.90
F	Clamp	.55
G	Clamp Nut and Pin	.55
H	Spur Cutter	.22
HI	Screw for Spur Cutter	.10
I	Tonguing Cutter Stop, 3/16 inch, for Cutter 24	.33
J	Tonguing Cutter Stop, 1/4 inch, for Cutter 23	.33
K	Sash Cutter Stop for Cutter 21	.33
L	Depth Gauge with Adjustment	.55
M	Nut for Depth Gauge with Adjustment and Pin	.33
N	Depth Gauge	.45
O	Slitting Cutter Stop	.33
P	Thumb Screw and Washer for Part No. 125 (Slitting Cutter) and K5, J5	.33
Q	Thumb Screw for Parts A5, E5, G5	.33
R	Long Rod, 8 1/4 inches	1.55
S	Short Rod, 4 1/2 inches	.77
T	Rod Set Screw	.22
U	Adjustable Guide	.55
A5	Reversible Fence	3.10
B5	Plate for Fence A5	.55
C5	Adjusting Screw for Fence E5	.55
D5	Swivel for Fence E5	1.20
E5	Fence	4.10
F5	Plate for Fence E5, used in connection with Swivel (Part D5)	.55
G5	Movable and Adjustable Bed	3.85
H5	Adjustable Slide	2.30
J5	Adjustable Stop Rest	1.00
K5	Adjustable Stop	.90
L5	Adjustable Stop Nut	.33
M5	Adjustable Stop Slide Screw	.33
O5	Adjustable Stop Shoe and Screw	.22
P5	Set Screw for Fence E5	.33
Q5	Coupling	.45
R5	Coupling Nut	.45
T5	Swivel Pins for Parts A5 and D5	.10
U5	Adjusting Screw for Movable and Adjustable Bed (Part G5) and Pin	.55
V5	Two Machine Screws for Plates B5 and F5	.10

Cutters for SARGENT Combination Planes

Illustrated on pages 10 to 15

One Complete Set Cutters for No. 1080 or 1080PB Plane..$9.40 Per Set
One Complete Set Cutters for No. 1085 Plane..... .16.50 Per Set

Cutters Nos. 1 to 18 and 21, 23 and 24 are packed regularly with Planes Nos. 1080 and 1085

Nos.	Inch	Description	Each	Nos.	Inch	Description	Each
1	1/8	Dado.....	$0.45	**11**	1 1/4	Rabbet and Filletster....	.77
2	3/16	Dado.....	.45	**12**	1/8	Beading Cutter.....	.45
3	1/4	Dado.....	.45	**13**	3/16	Beading Cutter.....	.45
4	5/16	Dado.....	.45	**14**	1/4	Beading Cutter.....	.45
5	3/8	Dado.....	.45	**15**	5/16	Beading Cutter.....	.45
6	7/16	Dado.....	.45	**16**	3/8	Beading Cutter.....	.45
7	1/2	Dado.....	.45	**17**	7/16	Beading Cutter.....	.45
8	5/8	Dado.....	.45	**18**	1/2	Beading Cutter.....	.45
9	3/4	Dado.....	.45	**21**	1 1/2	Sash Cutter.....	1.55
10A	13/16	Dado.....	.45	**23**	1/4	Tonguing Cutter.....	1.55
10	7/8	Dado.....	.45	**24**	3/16	Tonguing Cutter.....	1.55

Cutters Nos. 26 to 32 are packed regularly with Plane No. 1085 but must be ordered special for Plane No. 1080

Nos.	Inch	Description	Each	Nos	Inch	Description	Each
26	1/4	Reverse Beading Cutter..	$0.45	**30**	3/8	Reeding Cutter, 2 Beads.	$0.45
27	3/8	Reverse Beading Cutter..	.45	**31**	3/16	Reeding Cutter, 2 Beads.	.45
28	1/2	Reverse Beading Cutter..	.45	**32**	1/4	Reeding Cutter, 2 Beads.	.45
29	3/4	Reverse Beading Cutter..	.45				

Cutters Nos. 101 to 122 and 125 are packed regularly with Combination Moulding Planes Nos. 1085

Nos.	Inch	Description	Each	Nos	Inch	Description	Each
101	1/2	Quarter Hollow.....	$1.45	**113**	3/4	Grecian Ogee.....	$1.45
102	3/4	Quarter Hollow.....	1.45	**114**	1	Grecian Ogee.....	1.45
103	5/8	Quarter Round.....	1.45	**115**	1/4	Hollow, cuts 1/2" circle..	.65
104	7/8	Quarter Round.....	1.45	**116**	1/2	Hollow, cuts 1" circle..	.65
105	1/2	Reverse Ogee.....	1.45	**117**	3/4	Hollow, cuts 1 1/2" circle..	.65
106	3/4	Reverse Ogee.....	1.45	**118**	1	Hollow, cuts 2" circle .	.65
107	1	Reverse Ogee.....	1.45	**119**	1/4	Round, cuts 1/2" circle..	.65
108	5/8	Roman Ogee.....	1.45	**120**	1/2	Round, cuts 1" circle..	.65
109	7/8	Roman Ogee.....	1.45	**121**	3/4	Round, cuts 1 1/2" circle..	.65
110	5/8	Quarter Round with Bead	1.45	**122**	1	Round, cuts 2" circle..	.65
111	7/8	Quarter Round with Bead	1.45	**125**	...	Slitting Cutter.....	.90
112	1/2	Grecian Ogee.....	1.45				

Blanks for cutters and special cutters (suitable for various types of work), not included in the foregoing, will be furnished to order at a reasonable price. A drawing with full description and measurements of cutter is required where a special cutter is ordered.